TfA Ref: 19297

20 December 2024

Stormwater & Oily Water Management Statement

Proposed 24 hour Unmanned Truck Refuelling Facility at 310 Moama Street, Hay South NSW 2711

This Stormwater & Oily Water Management statement has been prepared with respect to the proposed unmanned truck refuelling facility located at the abovementioned location formally described as Lot 2 DP1212081 and aims to summarise the proposed stormwater and oily water management strategy.

All areas of the facility where transfer of hydrocarbons occur (unloading/loading) and/or potential spills may occur will be managed as follows:

- Dispensing of fuel for the trucks will occur in concrete bunded areas. Stormwater runoff and any spillage that may occur during the dispensing of fuel will be captured by grated gully pits located at the centre of the bunded areas and directed to an Enviro OE30 full retention oily water separator via underground pipe network for hydrocarbon removal. This unit is compliant with the requirements of EN-858-1 "Class 1" oil/water separators. Treated water from the Enviro OE30 unit will be then discharged to the site's stormwater network.
- The Enviro OE30 device is a fully integrated in-line device capable of removing pollutants including oils from run-off. The device does not require any power, utilising the energy of the water flow to separate and contain pollutants for periodical removal by evacuation equipment. The internal surface can be inspected and washed as required, whilst screens can be removed and cleaned if and as required.
- The device has a design service life of 100 years for fixed parts and 25 years for replacement parts. The Enviro OE30 unit claims a performance which can reach reductions of 95% for Gross Pollutants (GP), a 90% of Suspended Solids (TSS), a 97% of Total Phosphorous (TP), a 85% of total Nitrogen (TN), a 99.95% of total Hydrocarbons and 8,000 litres of Oil containment capacity. Hydrocarbon retention occurs in a separate chamber which operates as a best practice oil and grease arrestor.
- The OE30 will be fitted with an oil alert probe for oil spill detection and maintenance monitoring which includes an alarm panel for remote mounting. The alarm is triggered when hydrocarbon build-up accumulates, allowing the removal by a licensed contractor when required.
- Under normal operation, the Enviro OE30 unit will discharge treated stormwater with a total petroleum hydrocarbons (TPH) content below 5ppm (mg/L).

Stormwater surface runoff from the balance of the site will be directed into the existing network of channels within the verge of University Road (western boundary) and Sturt Highway (northern boundary). Runoff from the northern and eastern boundaries of the site will flow as sheet flow towards the western boundary, where it will be conveyed to the verge of University Road and collected by table drains. Treated water from the oily-water separator will also be discharged into the existing table drain within the verge of University Road.

A landscape buffer strip will be provided along the street frontage of University Road to aid with the removal of nutrients and suspended solids present in the stormwater runoff.

We believe that the proposed oily water and stormwater treatment systems will ensure the highest level of protection against fuel spills and incorporate water sensitive urban design measures to significantly improve the quality of the stormwater discharged from the site. To clarify the operation of the proposed system, refer to **Appendix A** for the proposed conceptual stormwater and oily water management plan and to **Appendix B** for the Enviro OE30 unit details.

Should you require any clarification regarding the information provided please do not hesitate to contact the undersigned.

Kind regards,

Juan D. Avella
Director – Civil/ Structural Engineering
BEng MBA MIEAust CPEng NER
For and on behalf of TfA Project Group.

Appendices A- Conceptual Stormwater & Oily Water Management Plan
B- Enviro OE30 information

APPENDIX A

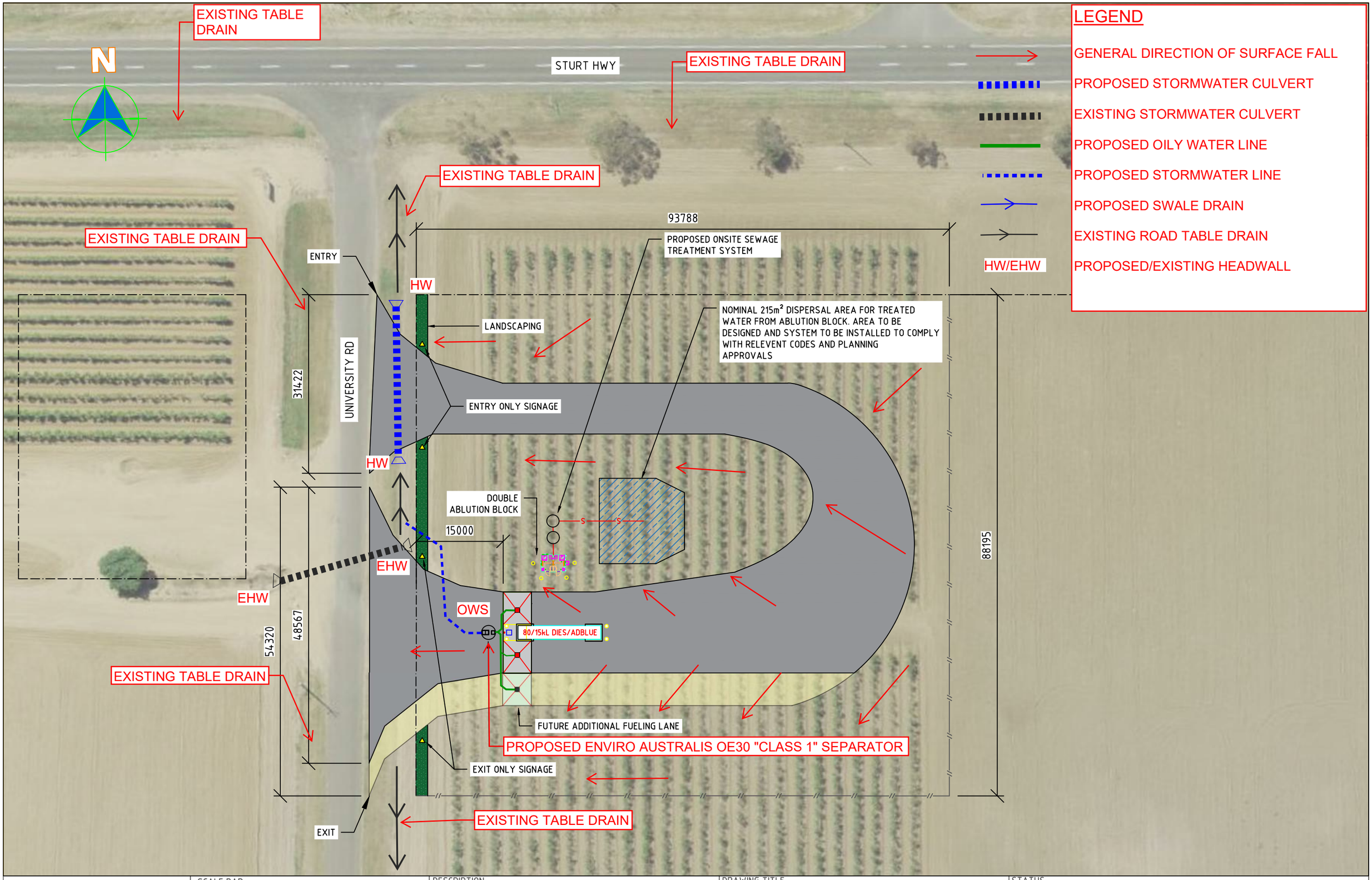

iOR

SCALE BAR

0 6 12 18 24 30m

1:600

DESCRIPTION

IOR UNMANNED DIESEL STOP

310 MOAMA STREET
HAY SOUTH NSW 2711 AUSTRALIA

DRAWING TITLE

PROPOSED SITE LAYOUT

STATUS

DA ISSUE

DRAWN	DATE CREATED	DRAWING NO.	REV
LD	19.12.2024	2023HA-002	D

A1 SCALE 1:250 | A3 SCALE 1:500 | SHEET

APPENDIX B

Enviro 'OE30' is a full retention oily water separator compliant with EN 858-1 and includes emergency spill protection to 8,000 litres

Flow rates based at 1% pipe gradient:-
Treated Flow.....22 L/sec
Gross Flow..... 123 L/sec

MASS:
(Based on "D" Class Covers)

Total mass for delivery based on minimum invert is 7.75 **tonnes**

Enviro OE30

General Notes

The Enviro 'OE30' is an Australia Designed and Manufactured Device for the removal of pollutants including oils from run-off water. The Enviro 'OE30' is normally installed in-line within new or existing drainage pipes and can be adapted to be installed in an open channel if required. The device does not require any power, utilising the energy in the water flow to separate and contain pollutants for periodical removal by evacuation equipment. Internal surface can be inspected and washed as required, whilst screens can be removed and also cleaned if and as required.

The Enviro 'OE30' are a unique oil/water Separator as well as a Stormwater Quality Improvement Devices (SQID's) which has undergone extensive performance stress testing by independent authorities. These tests indicate compliance with Environmental Protection Authority (EPA) Legislation and Guidelines which prohibit the discharge of pollutants into stormwater. The aim of the Enviro 'OE30' is to restore water quality to a safe and environmentally sustainable state, which pre-existed urbanisation. The application is aimed at any catchment, where an oil spill risk may exist.

Recommendations made in the Australian Run-Off Quality Guideline 2007 (ARQ) are adhered to. The 'OE' models also comply with EN-858-1, Class 1 oil/water separators.

Specifications: -

1. Design service life 100 years for fixed parts and 25 years for replacement parts
2. Hydraulic Resistance k factor = 0.425
3. Inlet to outlet differential = 25mm
4. Concrete chamber, risers and cover slabs are designed and manufactured in accordance with AS3600-2009 and under Quality Assurance 9001.
5. Covers are designed and tested in accordance with AS3996 – 2006 Access Covers and Grates
6. Internal components are manufactured from high grade, stainless steel to comply with International Corrosion Standards. There is no welding used. This complies with advice from both the American and Australian Institute of Engineers warning that welded stainless steel exposed to bacterial charged water can result in early corrosion and failure
7. 'OE30' performance testing verifies the following pollutant removal rates. The testing was performed across a range of concentrations and flow rates which replicated various run-off water conditions and confirmed: -
   7.1. gross pollutants, reduction exceeds 95%
   7.2. suspended solids, reduction exceeds.....90%
   7.3. total phosphorous, (TP) retention 97%
   7.4. total nitrogen, (TN) retention 85%
   7.5. total hydrocarbons.....99.95%
   7.6. Oil Containment.....8,000 litres
8. The lower storage chamber has the capacity to hold the annual load discharged from a catchment based on the ARQ Section 3.7 recommended allowance of 1m3/ha/ann.
9. An important feature of the Enviro 'OE30' is that all in flow is treated in accordance with EPA requirements that fuel-dispensing zones cannot discharge oil contaminants particularly as a result of emergency oil spills into environmental flows. Provision has been allowed for the installation of alarms and automatic evacuation systems.
10. Particle size capture is set to retain all particles greater than 500µ and to then retain a majority of particles to less than 100µ.
11. Hydrocarbon retention occurs in a separate chamber which operates as a best practice oil and grease arrestor
12. Re-suspension of hydrocarbons and all retained materials is prevented by including separate chambers for separation from flow and retention.

REV.	DESCRIPTION	DATE	APPROVED
0	Technical Specification Created	01-Sep-20	LC

REVISIONS

For further assistance: -
Technical Support Ph: .....+61 8 8564 2347
Email: info@enviroaustralis.com.au

UNLESS OTHERWISE SPECIFIED: DIMENSIONS ARE IN MILLIMETERS

BENDING RADIUS	K - FACTOR
PREPARED BY	Logesh S
APPROVED BY	L Crasti
DATE	01-Sep-20

MATERIAL: CONCRETE & S/STEEL

WEIGHT:

TITLE: ENVIRO OE30 SPECIFICATIONS AND TECHNICAL DATA

ASSEMBLY: SPECIFICATIONS

A3

REV: 0

SCALE: NTS

SHEET 1 OF 5

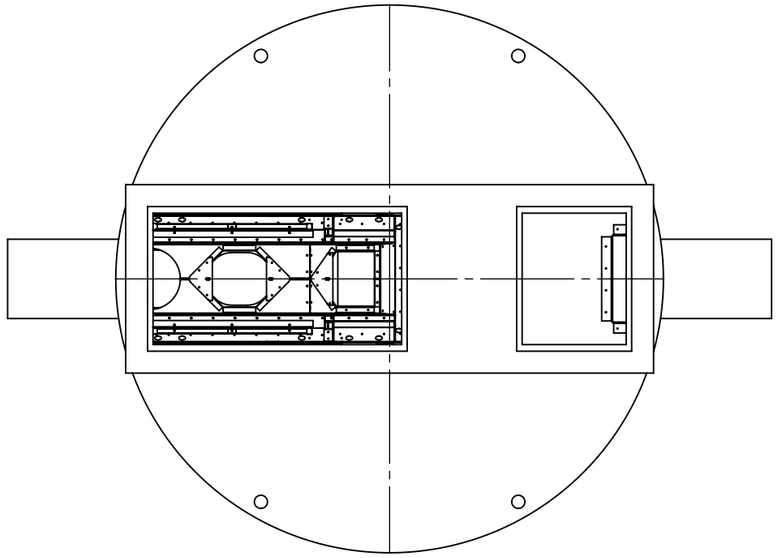

VIEW AS SEEN THROUGH COVERS OPENING
FOR SERVICE AND INSPECTION

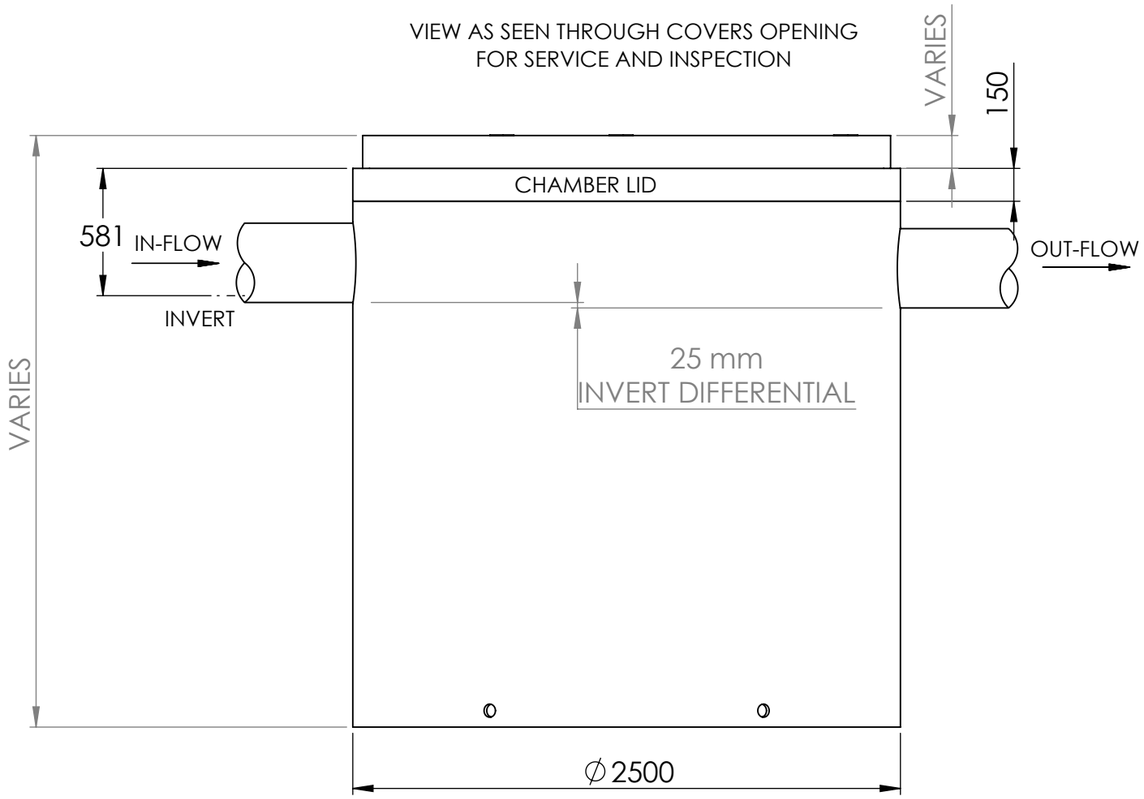

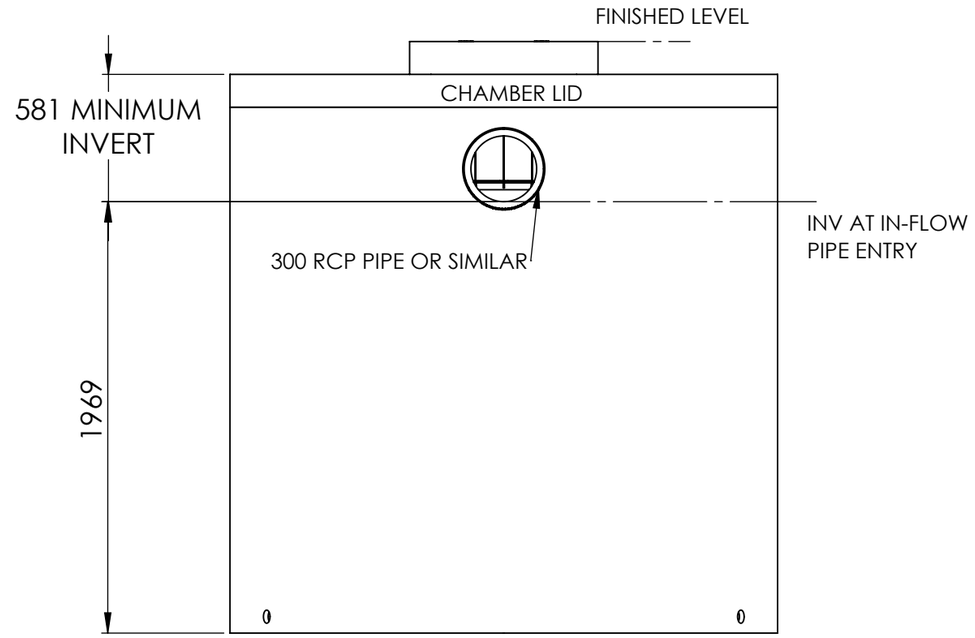

General Table		
CLASS	OVERALL HEIGHT	MIN. DEPTH TO INVERT
'D' CLASS	2700 mm	581 mm

UNLESS OTHERWISE SPECIFIED:
DIMENSIONS ARE IN MILLIMETERS

BENDING RADIUS	K - FACTOR
PREPARED BY	Logesh S
APPROVED BY	L Crasti
DATE	01-Sep-20

MATERIAL: CONCRETE & STEEL

ENVIRO

TITLE: ENVIRO OE30 GENERAL ARRANGEMENT

ASSEMBLY: SPECIFICATIONS

A3

REV: 0

SCALE: NTS

SHEET 2 OF 5

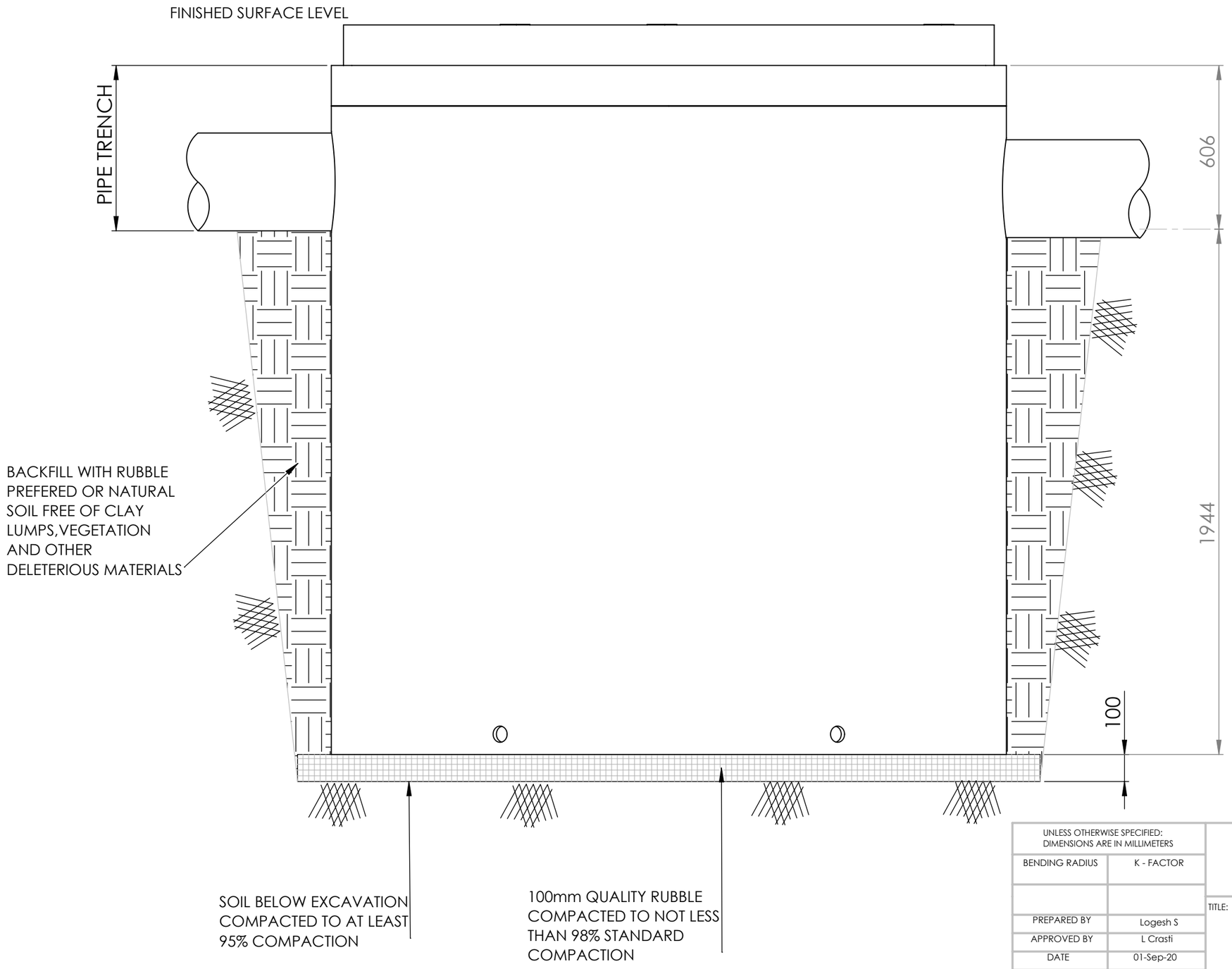

Estimated Excavation Volume = 17 m^3
(Volume Below Pipe O.D)

UNLESS OTHERWISE SPECIFIED: DIMENSIONS ARE IN MILLIMETERS	
BENDING RADIUS	K - FACTOR
PREPARED BY	Logesh S
APPROVED BY	L Crasti
DATE	01-Sep-20
MATERIAL:	CONCRETE & STEEL

ENVIRO

TITLE:
ENVIRO OE30
SITE INSTALLATION

ASSEMBLY:
SPECIFICATIONS

A3

REV: 0

SCALE: NTS

SHEET 3 OF 5

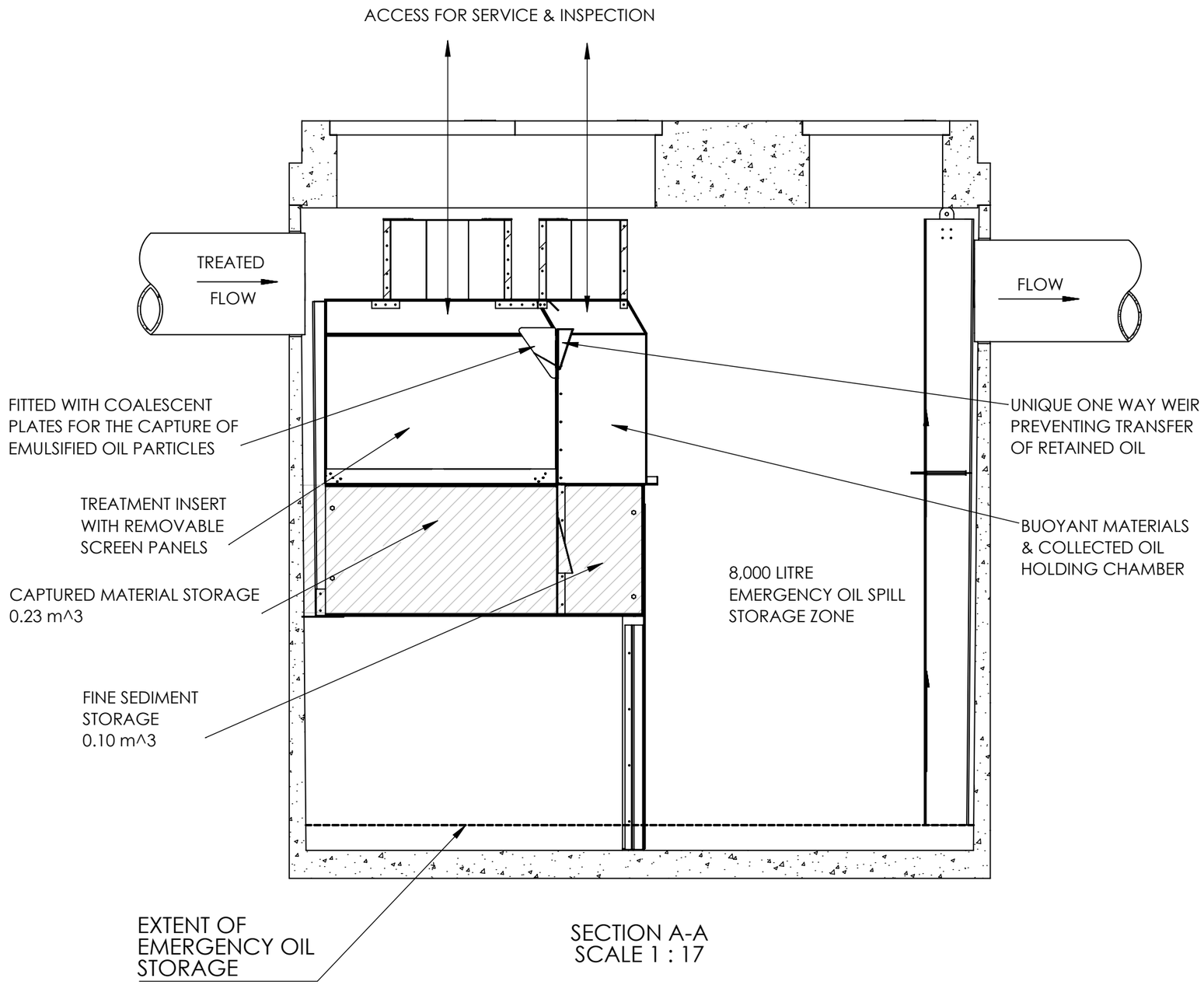

SECTION A-A
SCALE 1 : 17

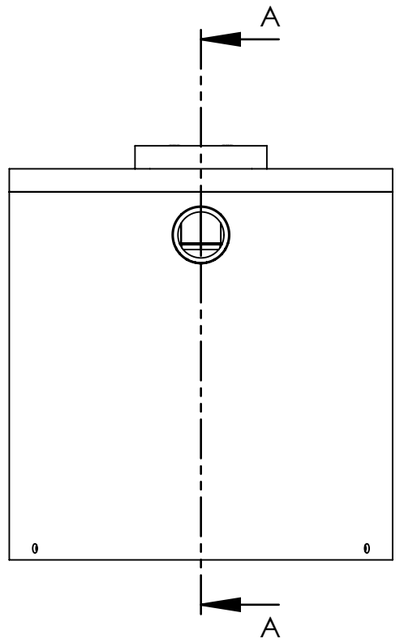

UNLESS OTHERWISE SPECIFIED: DIMENSIONS ARE IN MILLIMETERS	
BENDING RADIUS	K - FACTOR
PREPARED BY	Logesh S
APPROVED BY	L Crasti
DATE	01-Sep-20

ENVIRO

TITLE:
ENVIRO OE30
GENERAL OPERATION

MATERIAL:
CONCRETE & STEEL

ASSEMBLY:
SPECIFICATIONS

A3

REV: 0

SCALE: NTS

SHEET 4 OF 5

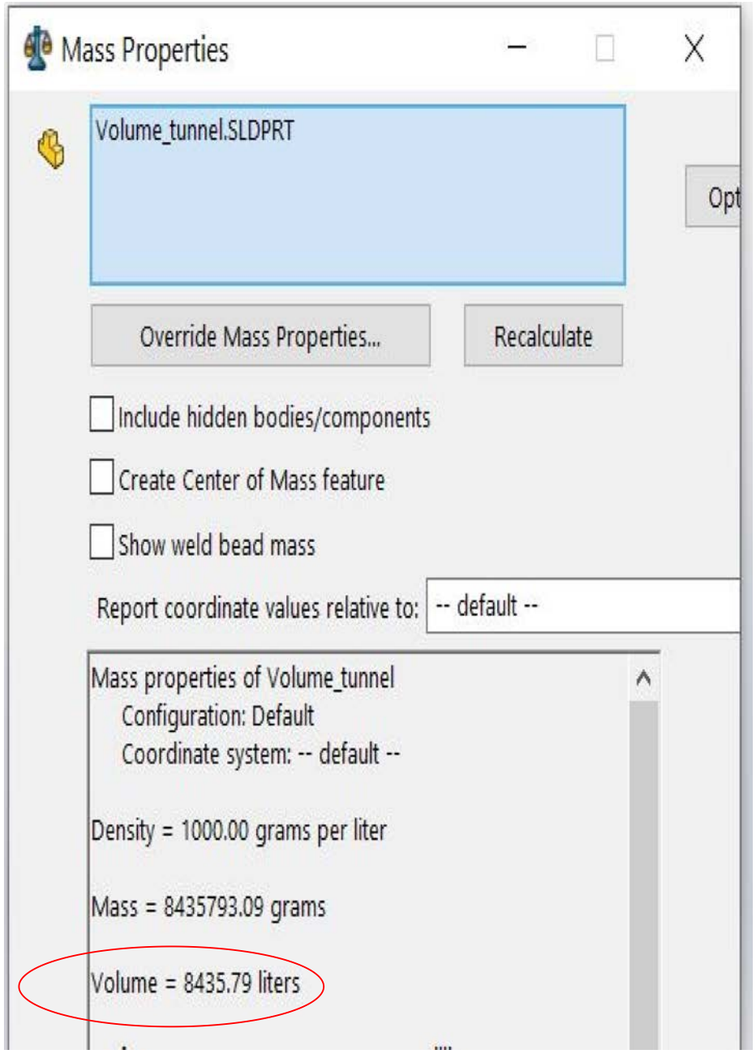

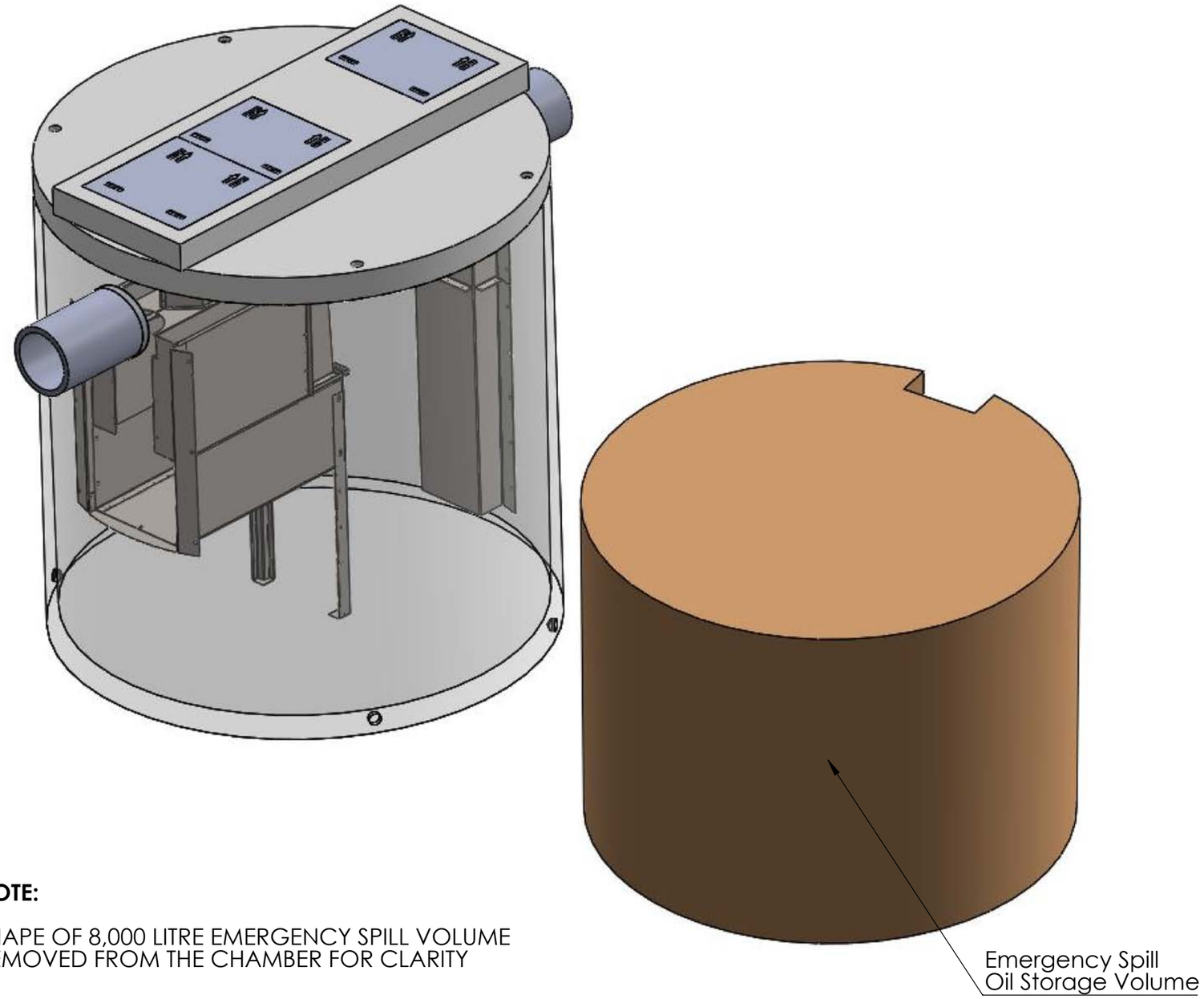

NOTE:

SHAPE OF 8,000 LITRE EMERGENCY SPILL VOLUME
REMOVED FROM THE CHAMBER FOR CLARITY

UNLESS OTHERWISE SPECIFIED: DIMENSIONS ARE IN MILLIMETERS	
BENDING RADIUS	K - FACTOR
PREPARED BY	Logesh S
APPROVED BY	L Crasti
DATE	01-Sep-20
MATERIAL:	CONCRETE & STEEL
TITLE:	ENVIRO OE30 STORAGE VOLUME
ASSEMBLY:	SPECIFICATIONS
	A3
	REV: 0
SCALE: NTS	SHEET 5 OF 5

ENVIRO